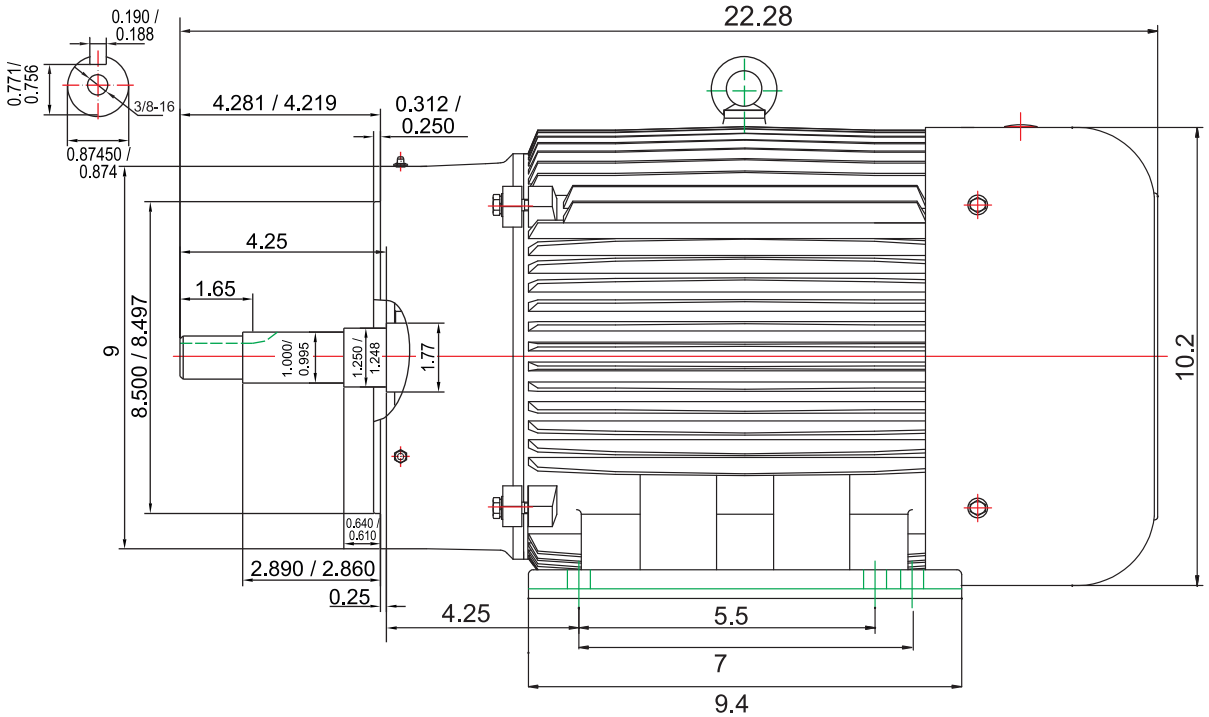

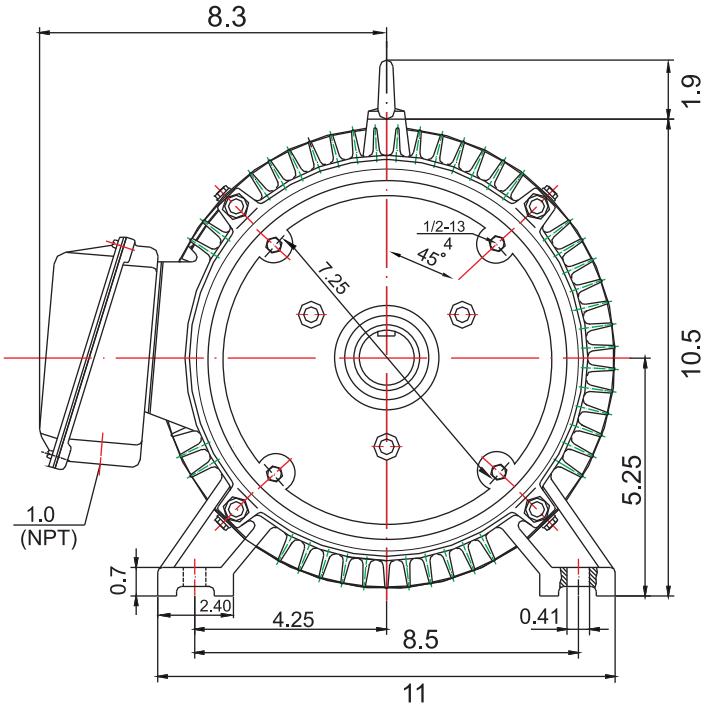

MaxMotion

Epact NEMA 12-11 Cast Iron T-Frame 215JM (1800 RPM 10HP)

Measurements are in inches. Drawing is not certified, please contact factory for certification.

www.mep.ca